RIVIAN

SEPTEMBER 2021

R1T + R1S

Cargo Crossbars Guide

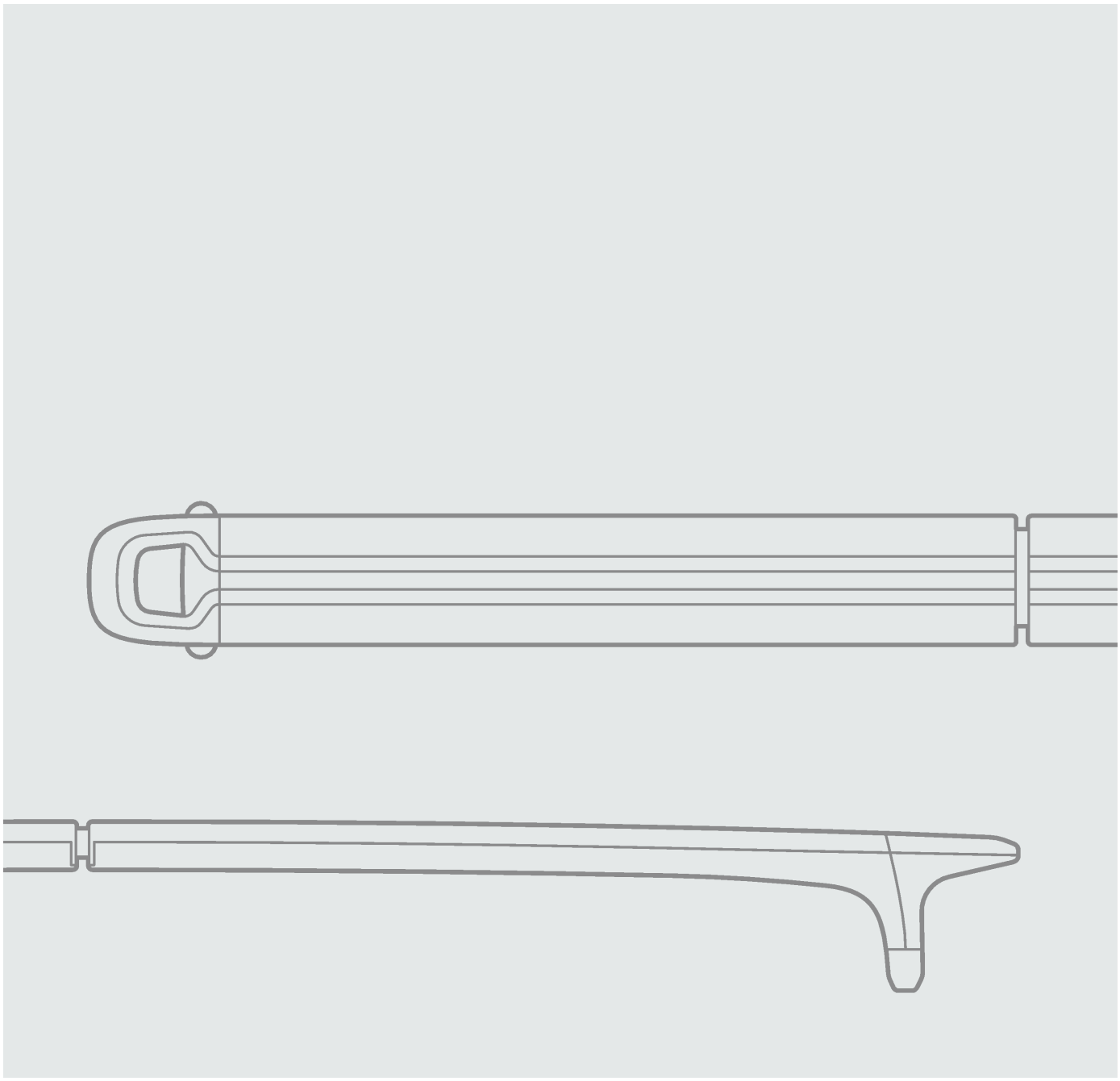

PRODUCT NUMBER PT00055308

© 2021 Rivian Automotive, LLC. All rights reserved.

All information in this document and all vehicle software is subject to copyright and other intellectual property rights of Rivian Automotive, LLC, its affiliates, or its licensors. This material may not be modified, reproduced, or copied, in whole or in part, without the prior written permission of Rivian Automotive, LLC, its affiliates, or its licensors. Unless indicated otherwise, all trademarks are owned and registered by Rivian Automotive, LLC, its affiliates, or its licensors in the United States and/or other countries. Please visit https://www.rivian.com/legal/brand for Rivian's trademarks and service marks.

Software embedded or accessed by the vehicle may utilize open source software. Please visit https://www.rivian.com/legal/open-source for more information.

Contents

Cargo Crossbars **4**

Install the Crossbars 4

Lock the Crossbars 6

Crossbar Loading 7

Remove the Crossbars 7

Maintenance 8

Crossbar Latch Tuning 8

Customer Service **9**

Cargo Crossbars

The Cargo Crossbar set includes:

- 2 crossbars
- 2 locking keys

INSTALL THE CROSSBARS

The roof of the vehicle is equipped with accessory ports. If you have a truck bed, there are additional accessory ports on the truck bed rails.

1. Adjust the width of the crossbars by extending them over the accessory ports on the vehicle.
2. After adjusting the crossbar width, lift up the crossbar paddle while setting the crossbar into the accessory port. You should hear one click.

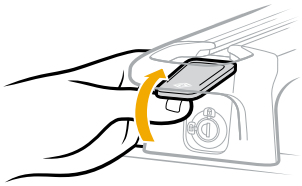

3. Ensure the crossbar is centered in the accessory port, then push the paddle down until you hear a second click. You may need to apply some additional downward force to fully latch the crossbar into the accessory port.

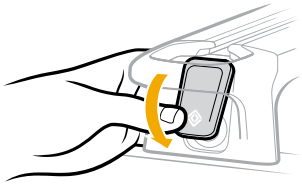

> **IMPORTANT**
>
> If you do not hear two clicks, the crossbar may not be latched. Reinstall the crossbar in the accessory port.

4. Repeat steps 2 and 3 to latch the remaining crossbar ends into the accessory ports.

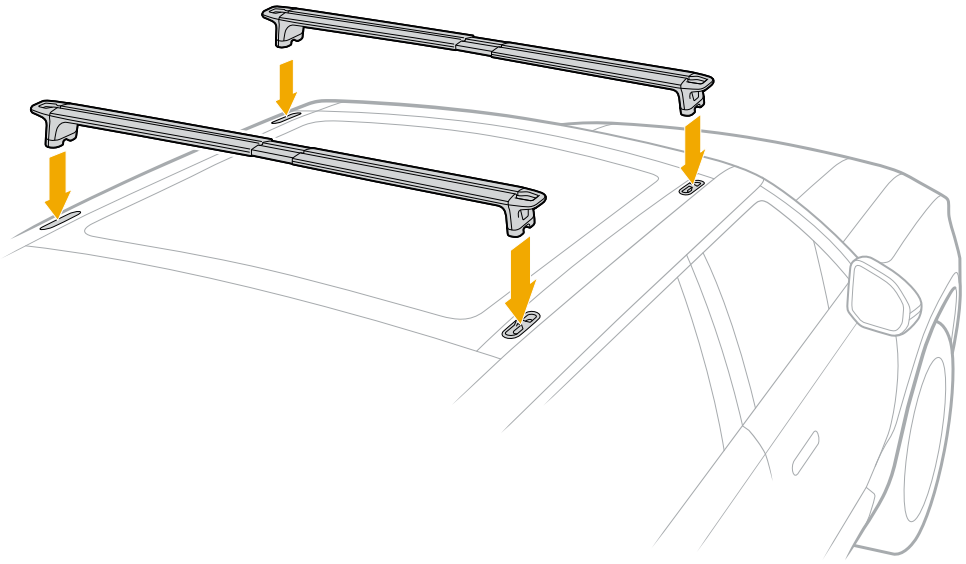

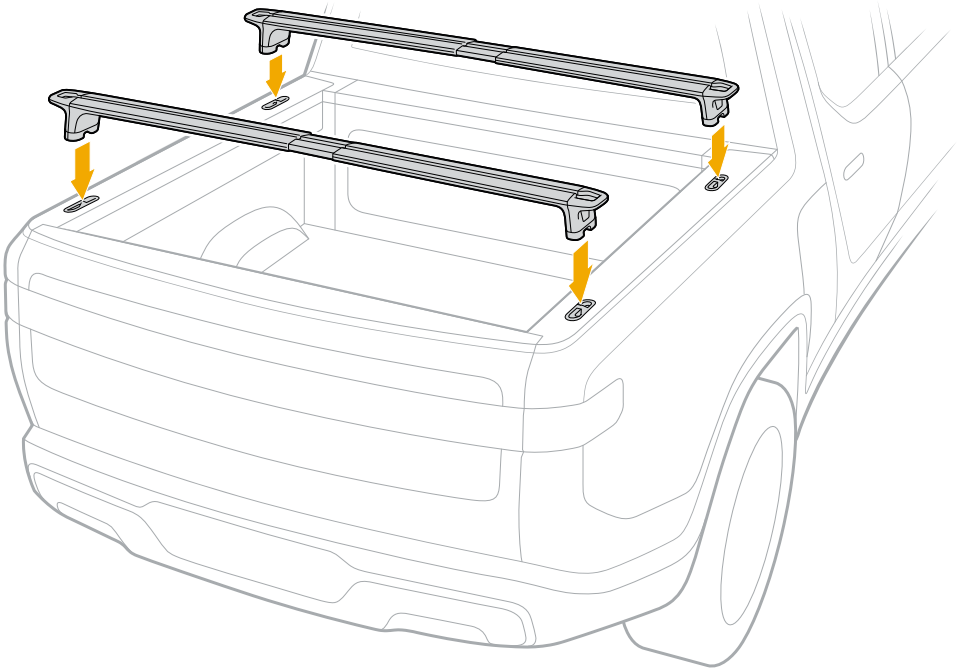

LOCK THE CROSSBARS

1. Lock the crossbars with the key by turning clockwise.

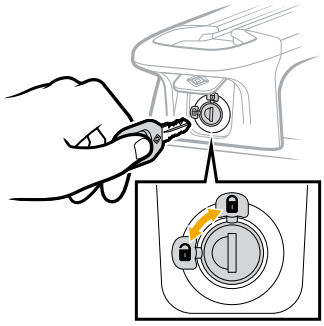

2. Push the crossbar paddle all the way down to cover the lock cylinder.

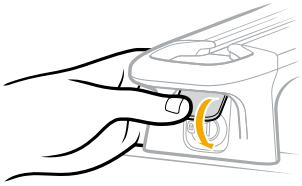

3. Repeat steps 1 and 2 on the remaining crossbar ends to ensure the crossbars are fully locked.

WARNING

- Incorrectly mounted crossbars and unsecured loads can loosen while driving and cause a serious crash. Check that the crossbars and loads are completely secured before driving, especially after driving through rough terrain.
- Don't drill holes in the crossbars. Only use manufacturer recommended parts and accessories.
- Modifications or accessories not provided by the manufacturer will void the manufacturer's warranty. The owner assumes liability for any damage or crashes caused by unauthorized modifications.

CROSSBAR LOADING

WARNING

- Don't exceed the maximum specified load for the Cargo Crossbars.
- Be aware of overall vehicle payload capacities while loading the Cargo Crossbars.
- Refer to the Tire and Loading Information label and Load Carrying Capacity Modification label (if included) on the driver's door pillar for the maximum allowable vehicle payload.

- The maximum dynamic (driving) load is 250 lbs (113 kg) per crossbar pair.
- The maximum static (parked) load is 780 lbs (353 kg). For example, when the vehicle is parked at a campsite with a rooftop tent, the maximum roof load is 780 lbs (353 kg) per crossbar pair.

Evenly distribute the load on the crossbars, maintaining a low center of gravity.

DANGER

Any load that extends over the windshield must be secured to the front and rear of the vehicle, in addition to the Cargo Crossbars. Failure to do so can result in property damage, personal injury, or death.

REMOVE THE CROSSBARS

1. Push up the crossbar paddle halfway to access the lock.
2. Unlock the crossbar with the key.
3. Lift up the paddle while lifting the crossbar to disengage the crossbar from the accessory port.

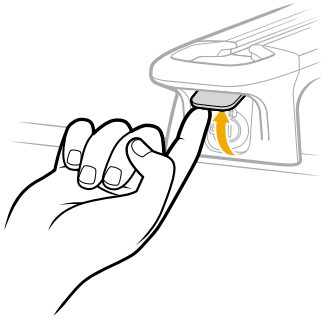

4. Repeat steps 1 to 3 for the remaining crossbar ends. Carefully remove the crossbars from your vehicle.

MAINTENANCE

Clean the crossbars with a solution of water and standard car wash liquid. Don't use cleaners that contain bleach, ammonium, or alcohol. Remove the crossbars when not in use.

CROSSBAR LATCH TUNING

Over time, the crossbar latching mechanism may need adjustment. Contact Rivian Service if the crossbar does not securely latch in the accessory ports.

Customer Service

Still need help? Connect with us.

RIVIAN

CUSTOMER ENGAGEMENT CENTER

(888) RIVIAN1 / (888) 748-4261
customerservice@rivian.com
rivian.com Support Center and Chat

ROADSIDE ASSISTANCE 24/7

(844) RIVIAN4 / (844) 748-4264

INSURANCE

(888) RIVIAN8 / (888) 748-4268

SERVICE 24/7

(855) RIVIAN5 / (855) 748-4265